GEP-F405-HD

Manual V1_0

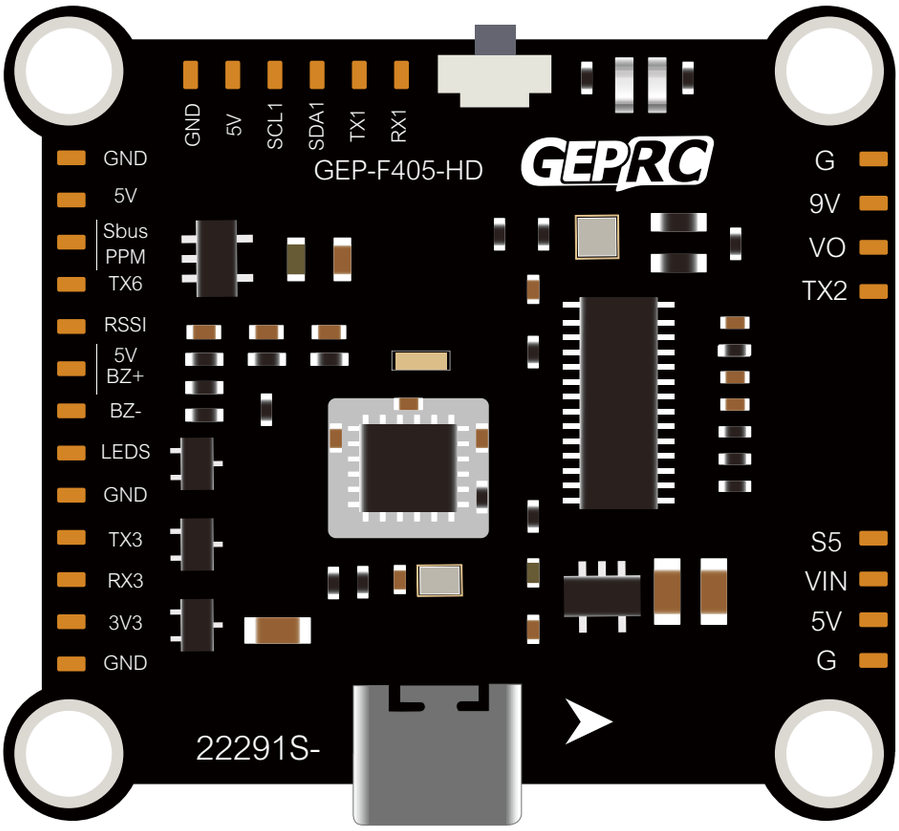

SPECS：

GEP-F405-HD Flight Controller:

MCU: STM32F405
IMU: MPU6000(SPI)
DJI FPV Air Unit Supported.
BlackBox: 16Mb onboard Flash
Type-C USB interface
OSD: BetaFlight OSD w/ AT7456E chip
Baro：BMP280
BEC Output: 5V,9V BEC
Integrated LC Filter
Firmware target: GEPRCF405
Size: 36x36mm board, φ4mm with Grommets φ3mm
Power input: 3-6S LiPo
6x UART

BL32 50A ESC 4IN1：

MCU: STM32FO51K86(32bit 48mHz)
Continuous Current: 50A
Peak Current: 55A (5S)
Current sensor: YES
Telemetry：Supported
Support DSHOT1200/DSHOT600, PWM, Multishot, OneShot
Firmware Version:GEPRC-BL32-4IN1
Input Voltage: 3-6S Lipo

Instruction Diagram

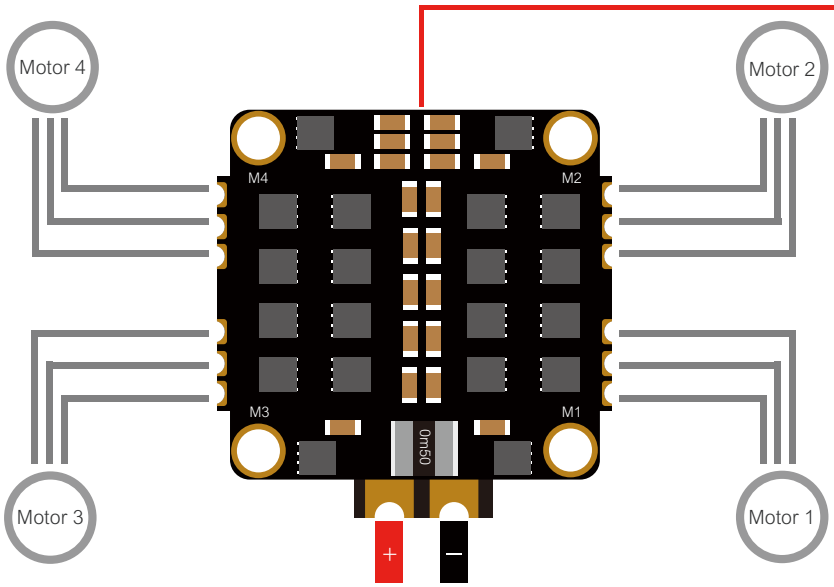

3-6S Lipo

BLheli_32 50A 4in1 ESC(30.5*30.5mm)

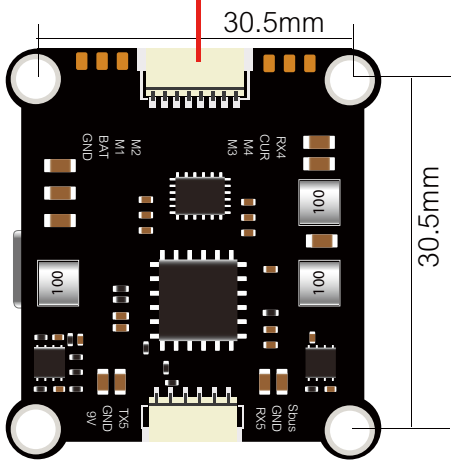

GEP-F405-HD Flight Controller

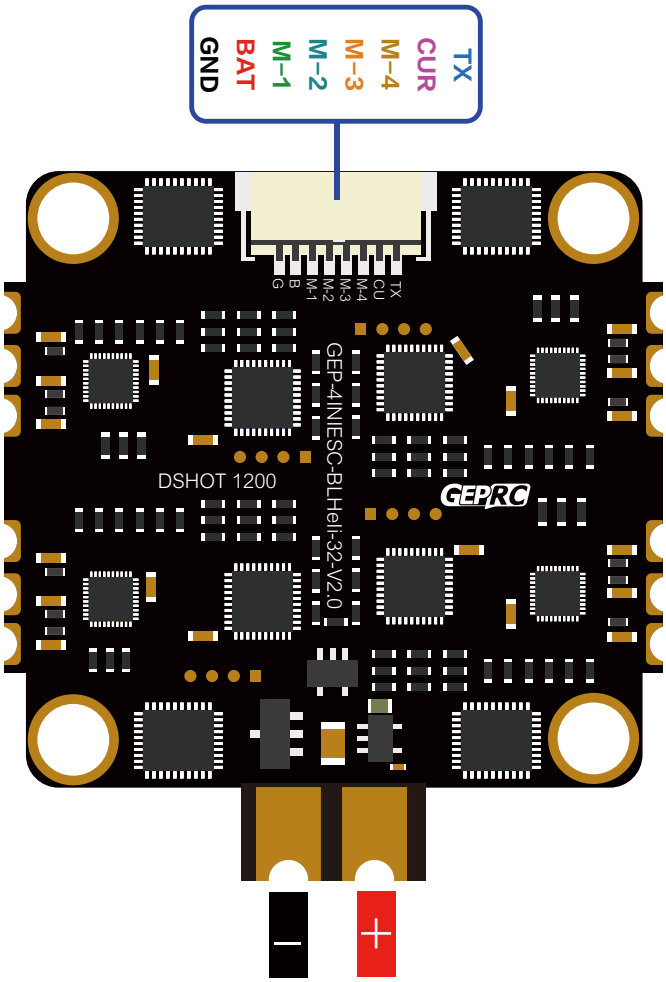

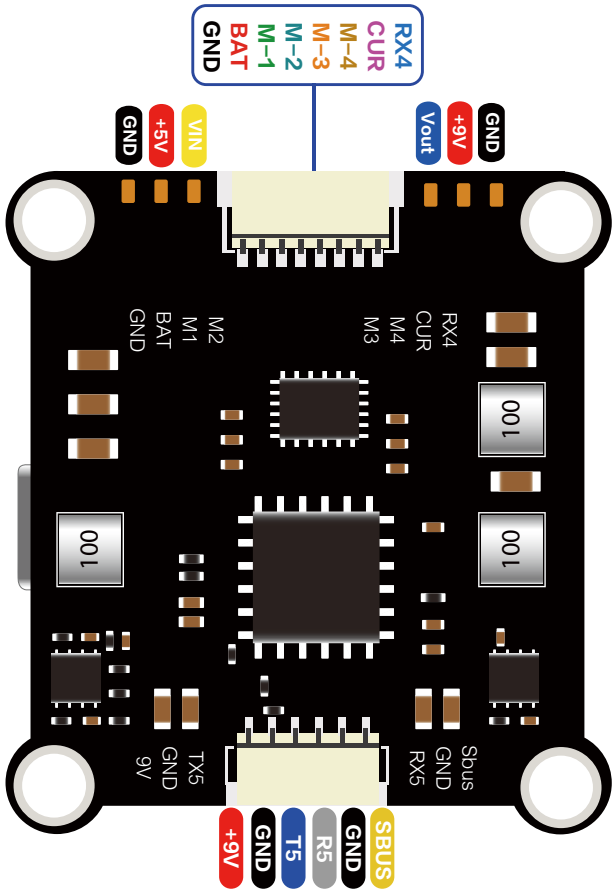

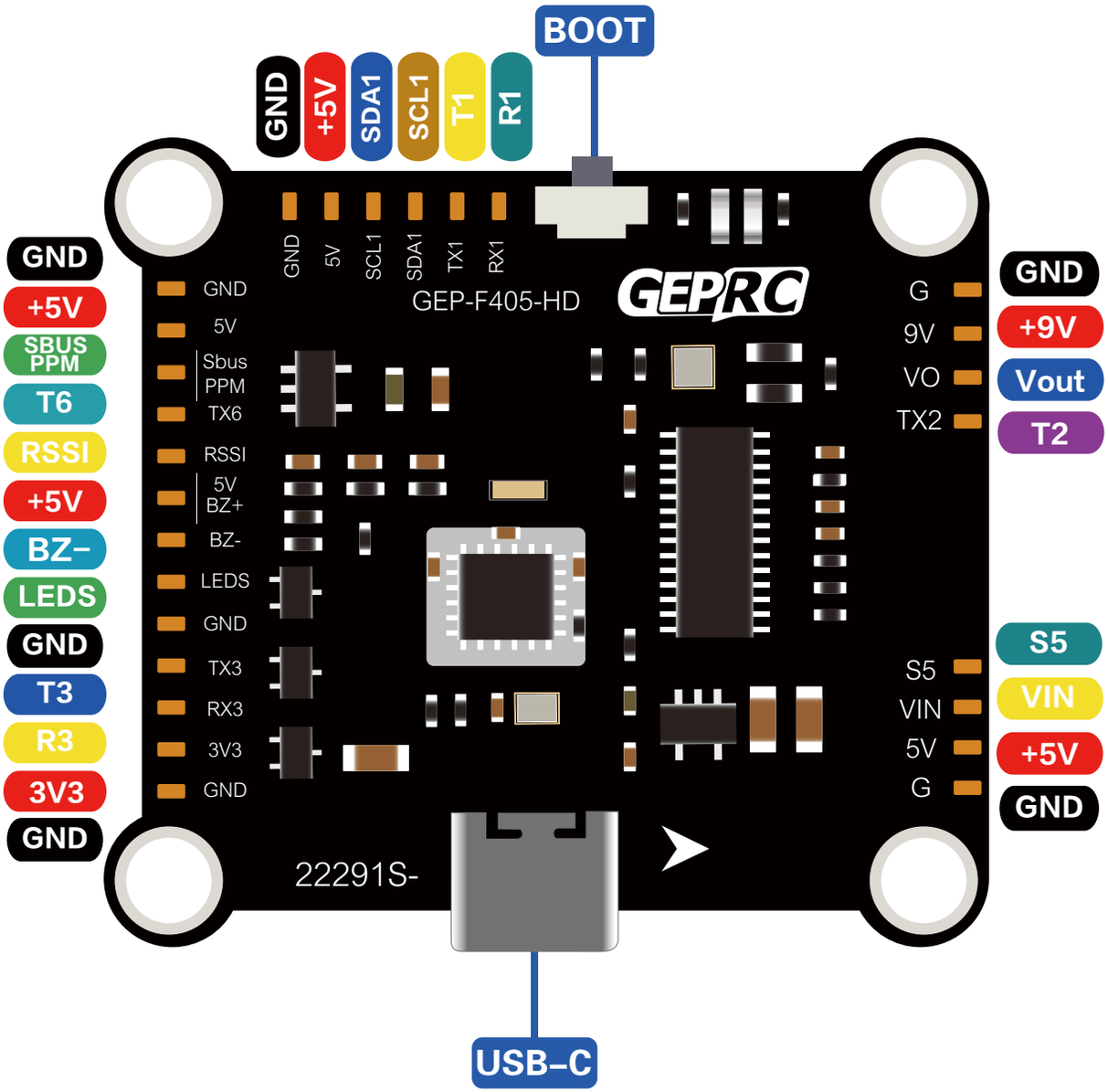

DJI Digital FPV System

Ports

WIKI

Note: not all combinations are valid. When the flight controller firmware detects this the serial port configuration will be reset.
Note: Do **NOT** disable MSP on the first serial port unless you know what you are doing. You may have to reflash and erase your configuration if you do.

Identifier	Configuration/MSP	Serial Rx	Telemetry Output	Sensor Input	Peripherals
USB VCP	115200		Disabled AUTO	Disabled AUTO	Disabled AUTO
UART1	115200		Disabled AUTO	Disabled AUTO	Disabled AUTO
UART2	115200		Disabled AUTO	Disabled AUTO	Disabled AUTO
UART3	115200		Disabled AUTO	Disabled AUTO	Disabled AUTO
UART4	115200		Disabled AUTO	Disabled AUTO	Disabled AUTO
UART5	115200		Disabled AUTO	Disabled AUTO	Disabled AUTO
UART6	115200		Disabled AUTO	Disabled AUTO	Disabled AUTO

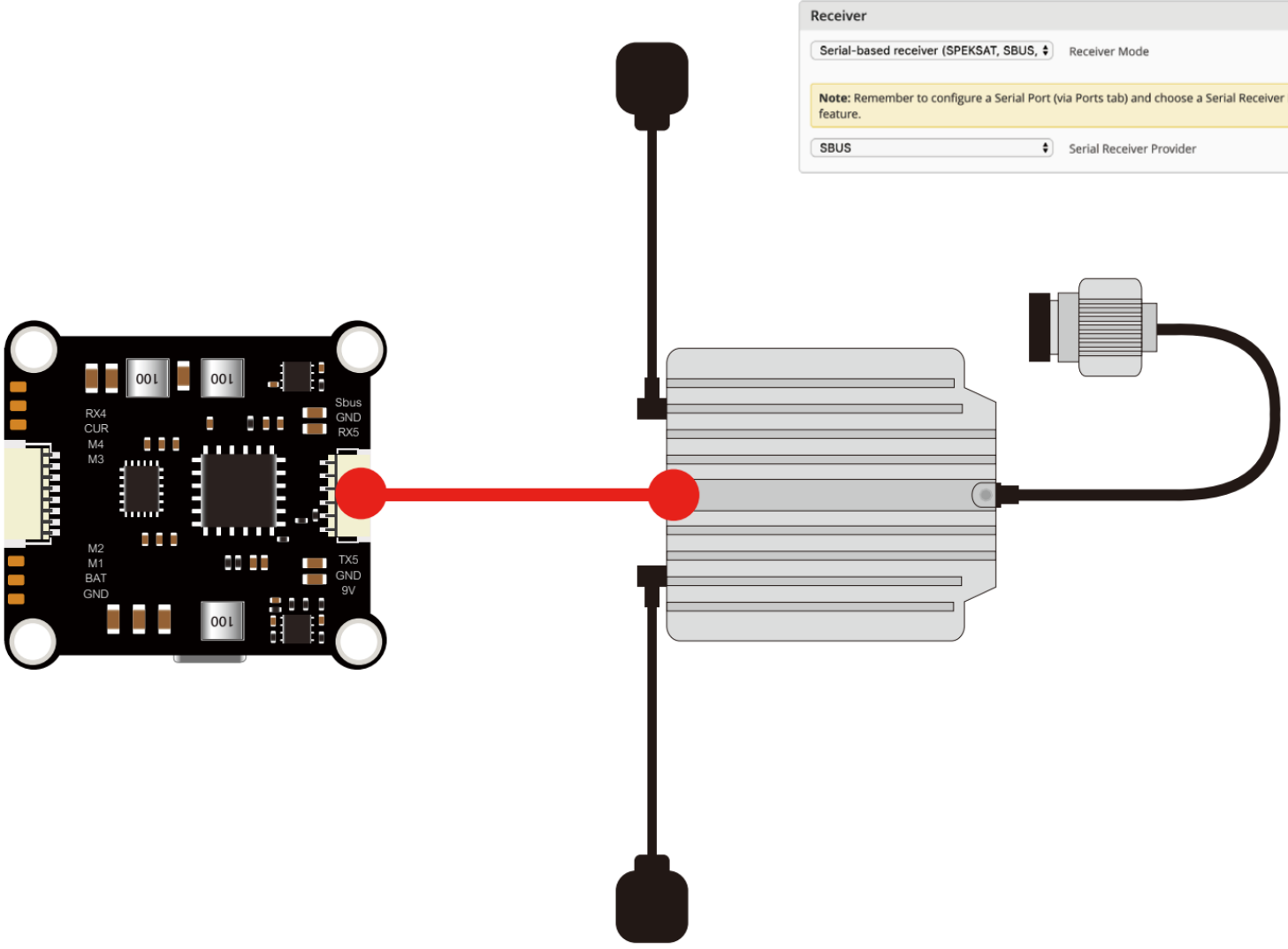

Receiver UART6

Ports

WIKI

Note: not all combinations are valid. When the flight controller firmware detects this the serial port configuration will be reset.
Note: Do **NOT** disable MSP on the first serial port unless you know what you are doing. You may have to reflash and erase your configuration if you do.

Identifier	Configuration/MSP	Serial Rx	Telemetry Output	Sensor Input	Peripherals
USB VCP	115200		Disabled AUTO	Disabled AUTO	Disabled AUTO
UART1	115200		Disabled AUTO	Disabled AUTO	Disabled AUTO
UART2	115200		Disabled AUTO	Disabled AUTO	Disabled AUTO
UART3	115200		Disabled AUTO	Disabled AUTO	Disabled AUTO
UART4	115200		Disabled AUTO	Disabled AUTO	Disabled AUTO
UART5	115200		Disabled AUTO	Disabled AUTO	Disabled AUTO
UART6	115200		Disabled AUTO	Disabled AUTO	Disabled AUTO

SBUS

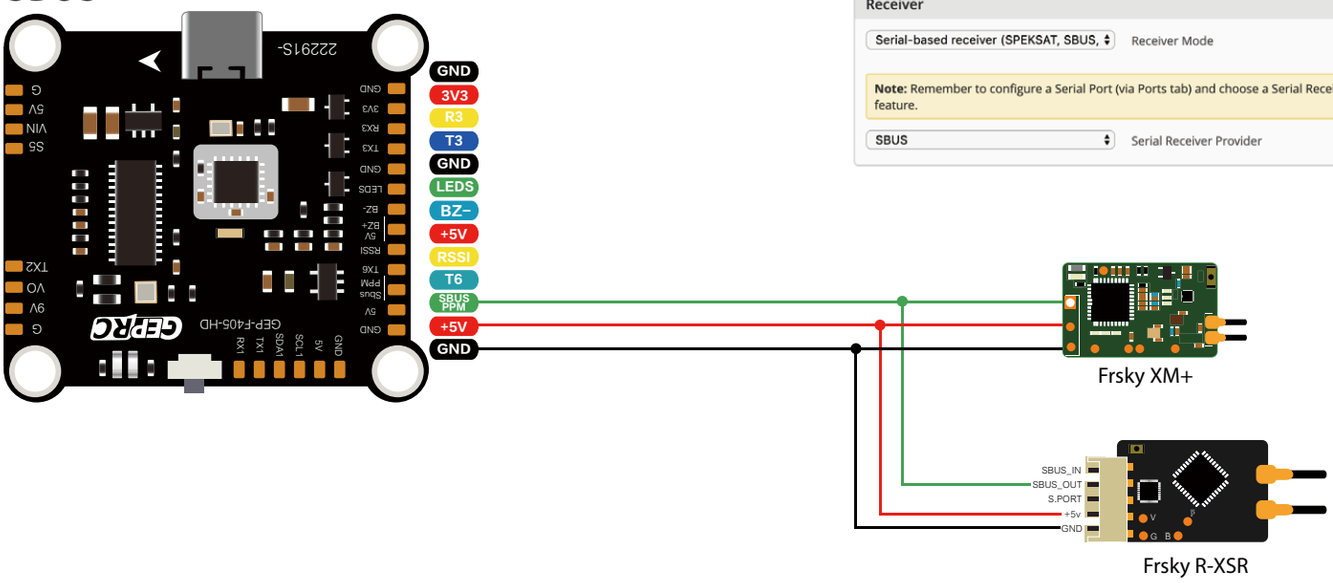

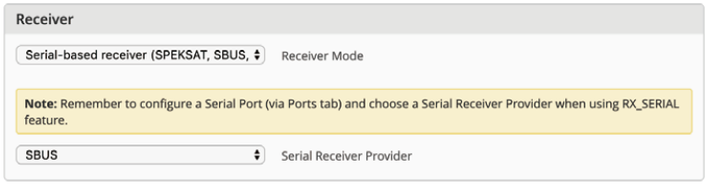

F.Port

CLI : set serialrx_halfduplex = ON
save

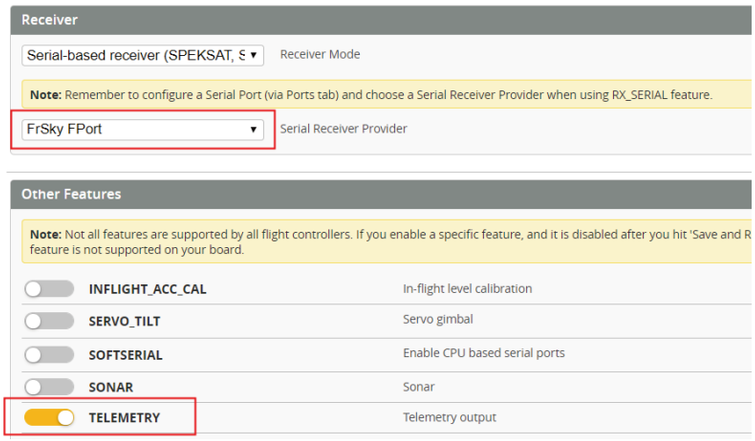

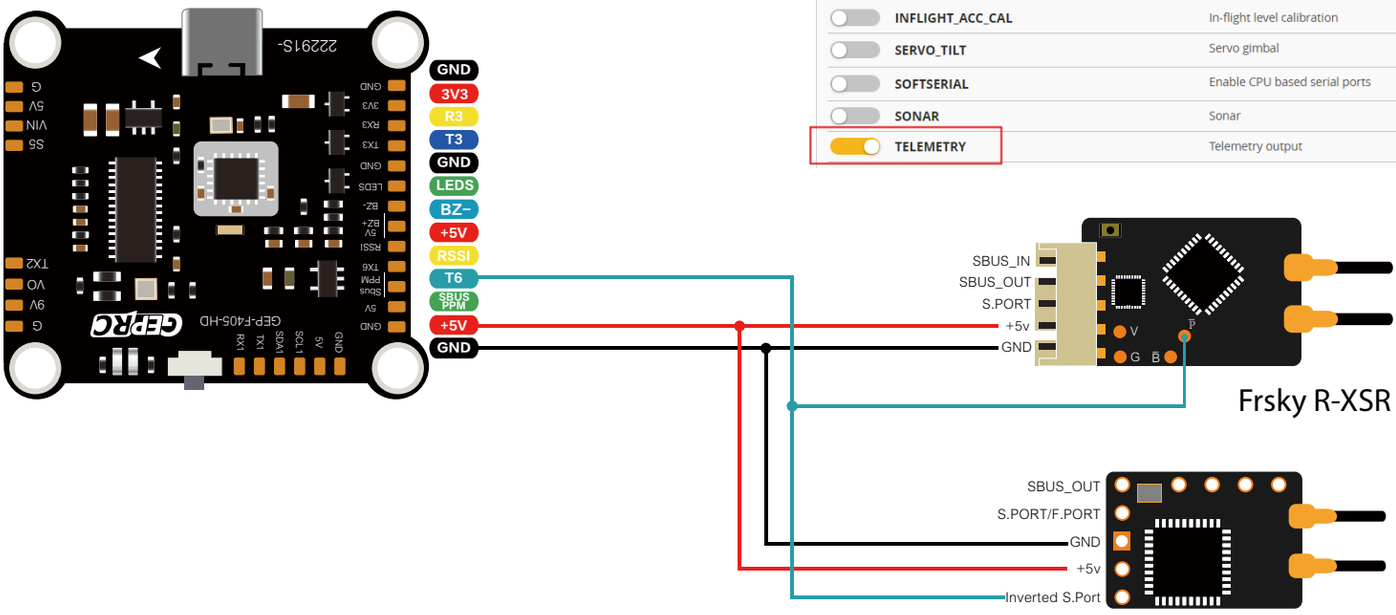

IBUS

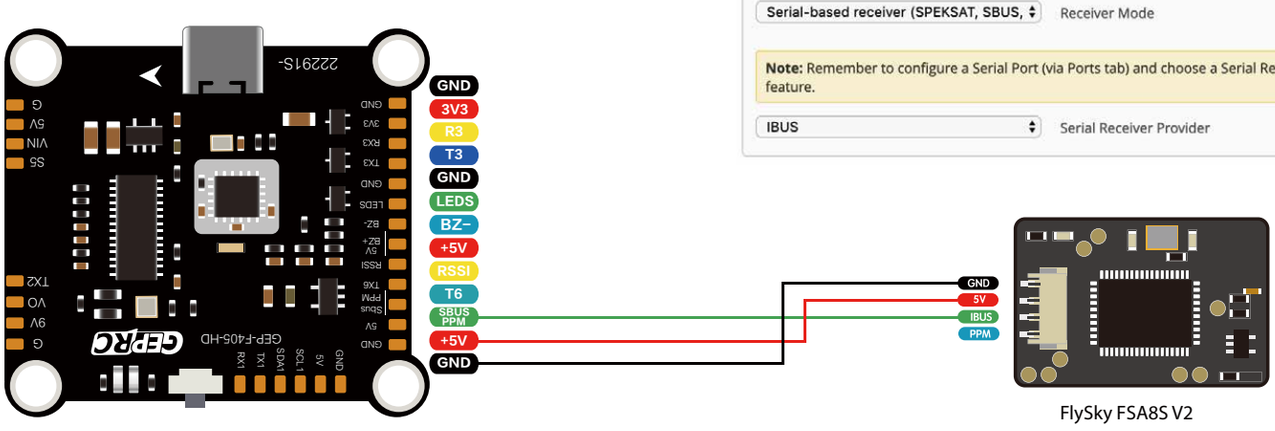

Receiver UART3

端口 WIKI

注意：不是所有的组合都是有效的，如果飞控检查到某组合不能同时工作，对应串口的设置将会被重置。
注意：不要 关闭第一个串口的MSP选项。否则你可能要重新烧录固件并清空（丢失）所有设置。

标识符	设置/MSP	串行数字接收机	遥测输出	传感器输入	外设
USB VCP	115200		已禁用 AUTO	已禁用 AUTO	已禁用 AUTO
UART1	115200		已禁用 AUTO	已禁用 AUTO	已禁用 AUTO
UART2	115200		已禁用 AUTO	已禁用 AUTO	图传(IRC Tram AUTO
UART3	115200		已禁用 AUTO	已禁用 AUTO	已禁用 AUTO
UART4	115200		已禁用 AUTO	已禁用 AUTO	已禁用 AUTO
UART5	115200		已禁用 AUTO	已禁用 AUTO	已禁用 AUTO
UART6	115200		已禁用 AUTO	已禁用 AUTO	已禁用 AUTO

TBS Crossfire Nano RX

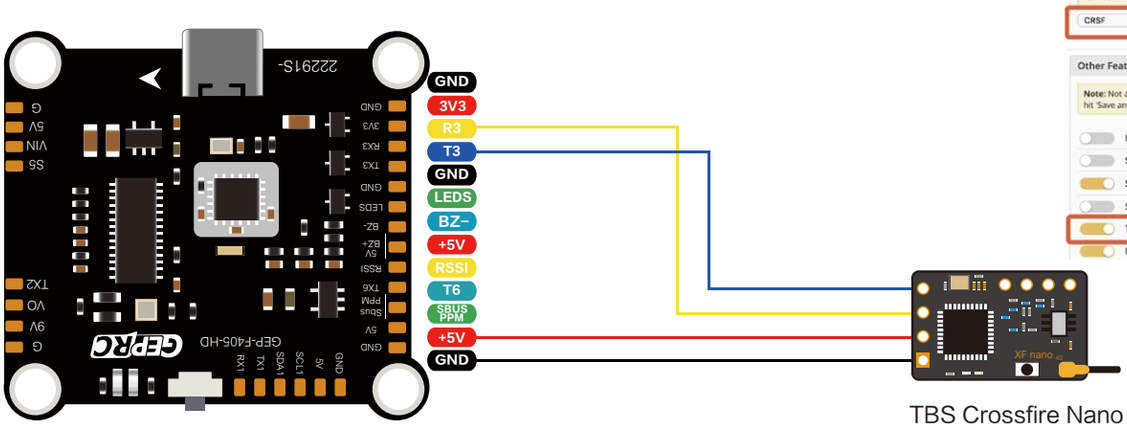

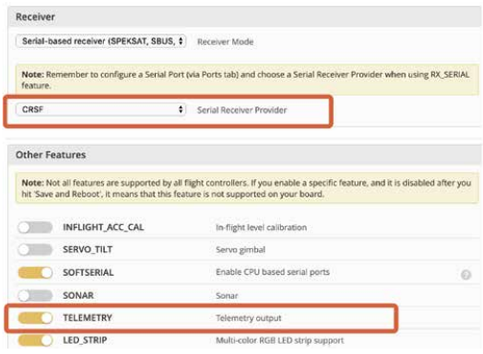

DSM/DSMX

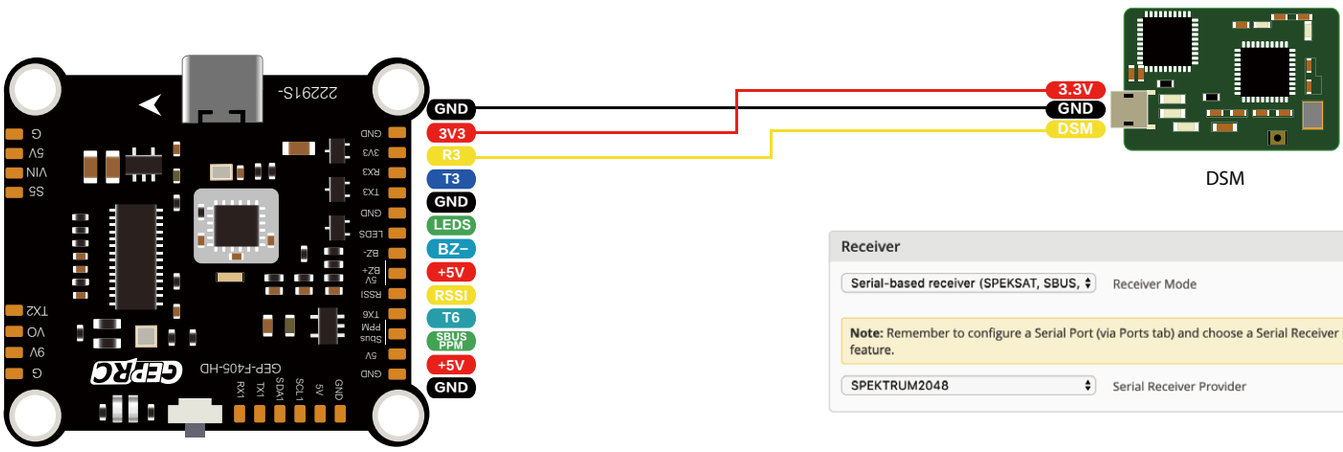

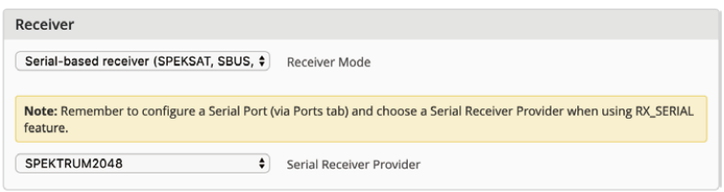

ESC

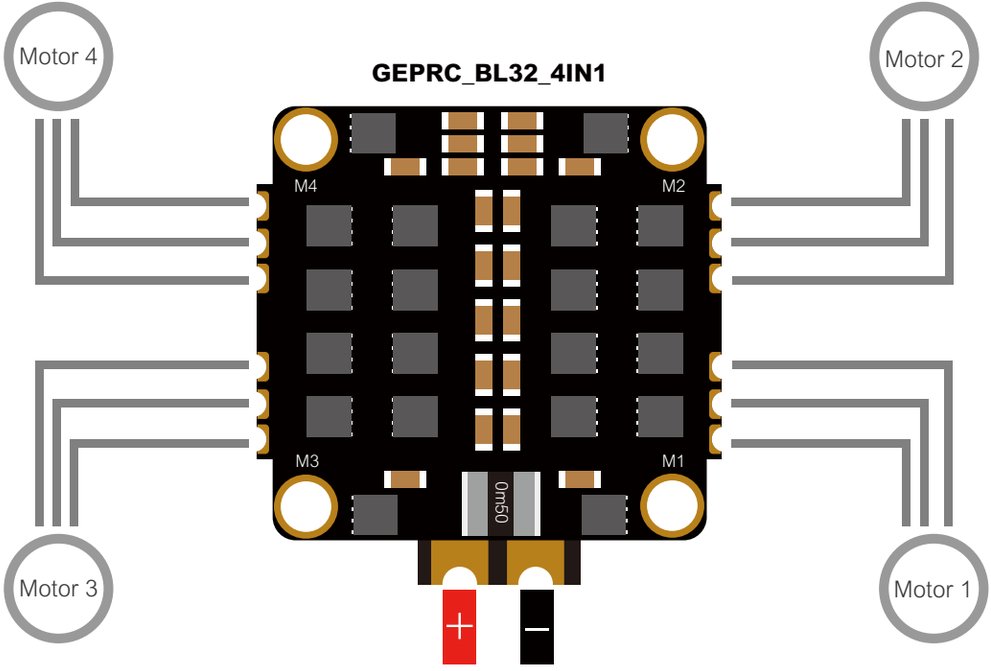

3-6S Lipo

BLheli_32 50A 4in1 ESC(30.5*30.5mm)

VTX

Ports

WIKI

Note: not all combinations are valid. When the flight controller firmware detects this the serial port configuration will be reset.
Note: Do **NOT** disable MSP on the first serial port unless you know what you are doing. You may have to reflash and erase your configuration if you do.

Identifier	Configuration/MSP	Serial Rx	Telemetry Output	Sensor Input	Peripherals
USB VCP	115200		Disabled AUTO	Disabled AUTO	Disabled AUTO
UART1	115200		Disabled AUTO	Disabled AUTO	Disabled AUTO
UART2	115200		Disabled AUTO	Disabled AUTO	Disabled AUTO
UART3	115200		Disabled AUTO	Disabled AUTO	
UART4	115200		Disabled AUTO	Disabled AUTO	
UART5	115200		Disabled AUTO	Disabled AUTO	
UART6	115200		Disabled AUTO	Disabled AUTO	Disabled AUTO

Disabled
Blackbox logging
VTX (TBS SmartAudio)
VTX (IRC Tramp)
Camera (RunCam Protocol)
Benewake LIDAR

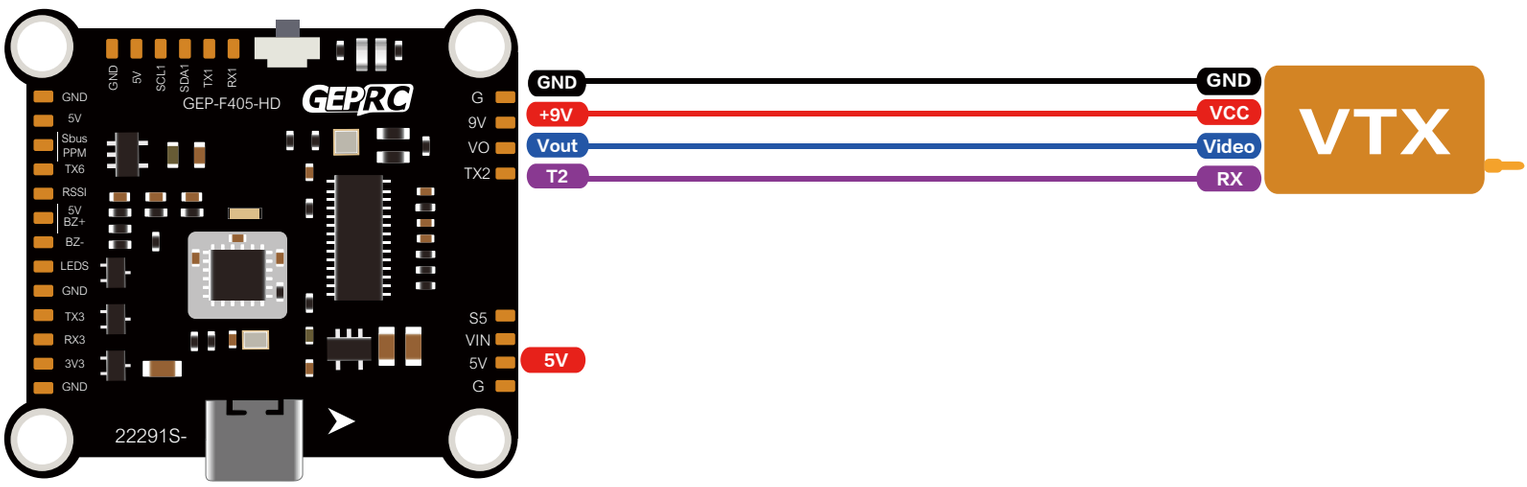

Note: Different graph transmission has different requirements for supply voltage.Power supply wiring is only an example, please select the actual

situation to select the appropriate.Supply voltage to avoid damage to graph transmission.

Camera

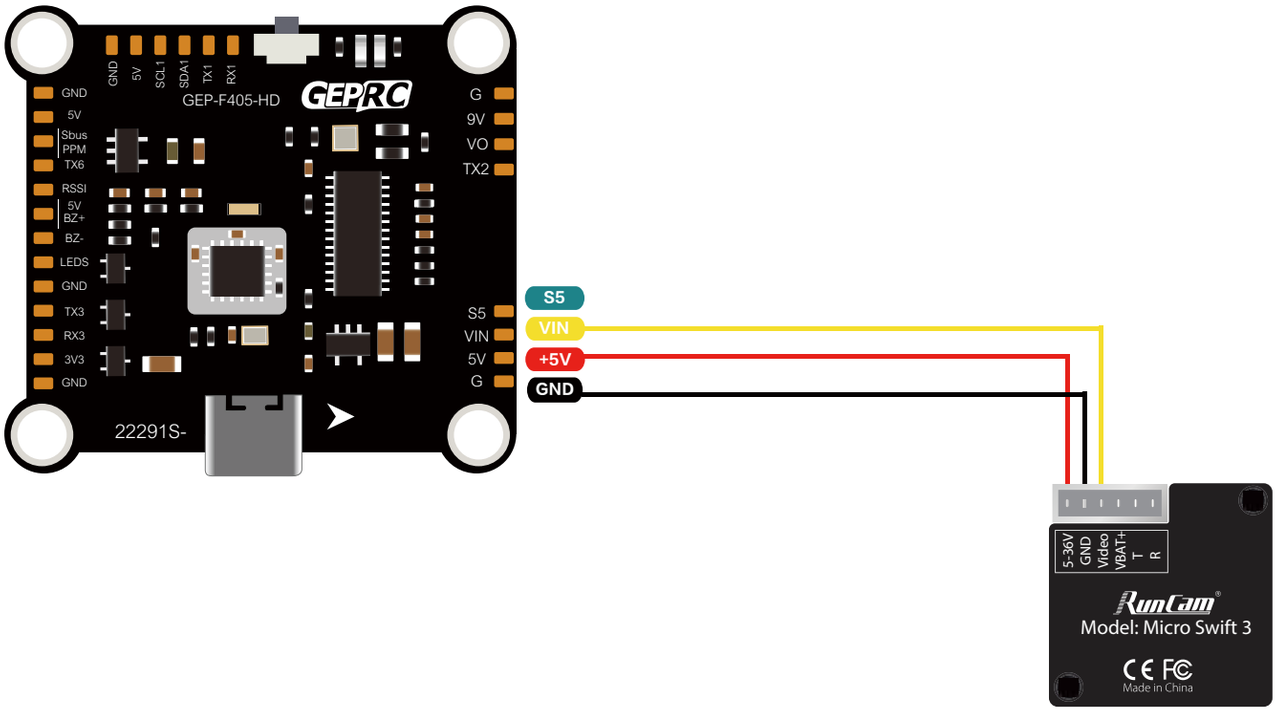

LED & Buzzer

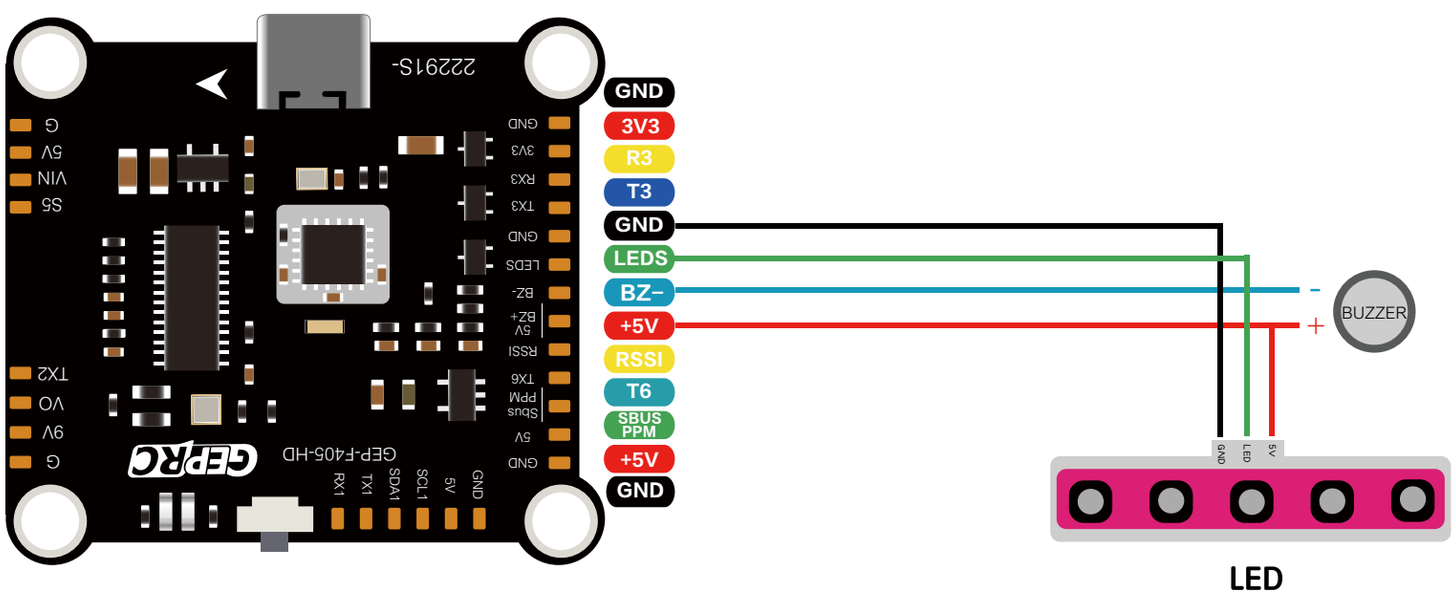

GPS & Compass

Ports WIKI

Note: not all combinations are valid. When the flight controller firmware detects this the serial port configuration will be reset.
Note: Do **NOT** disable MSP on the first serial port unless you know what you are doing. You may have to reflash and erase your configuration if you do.

Identifier	Configuration/MSP	Serial Rx	Telemetry Output	Sensor Input	Peripherals
USB VCP	115200		Disabled AUTO	Disabled AUTO	Disabled AUTO
UART1	115200		Disabled AUTO	GPS AUTO	Disabled AUTO
UART2	115200		Disabled AUTO	Disabled AUTO	Disabled AUTO
UART3	115200		Disabled AUTO	Disabled AUTO	Disabled AUTO
UART4	115200		Disabled AUTO	Disabled AUTO	Disabled AUTO
UART5	115200		Disabled AUTO	Disabled AUTO	Disabled AUTO
UART6	115200		Disabled AUTO	Disabled AUTO	Disabled AUTO

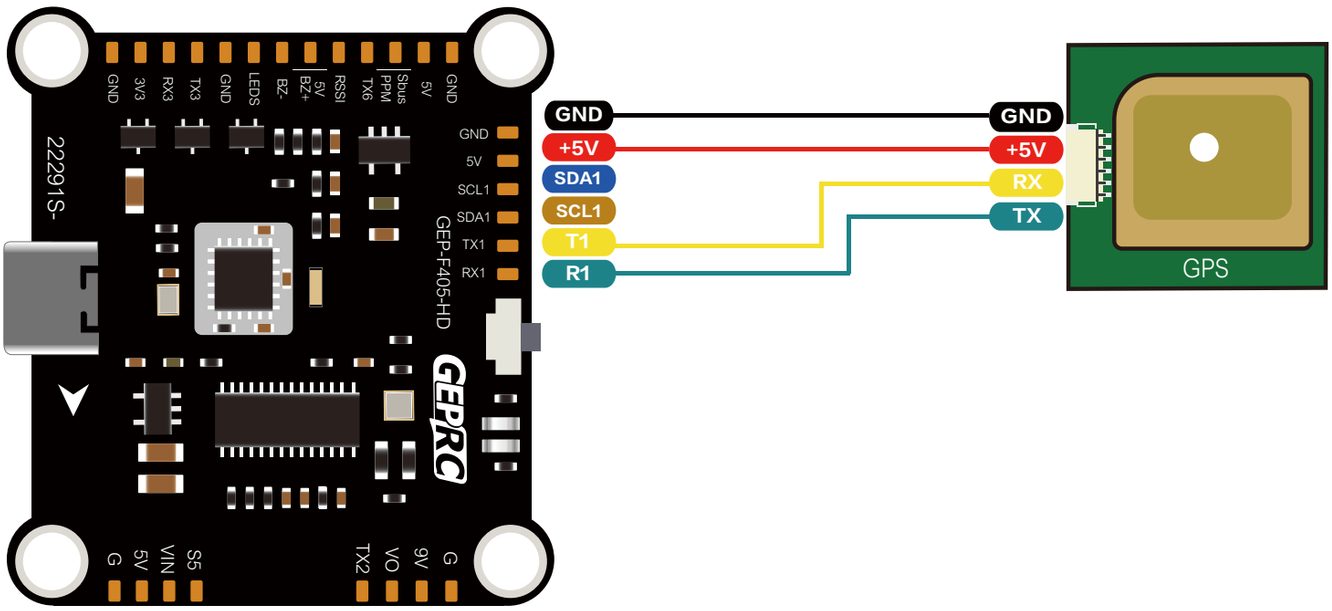

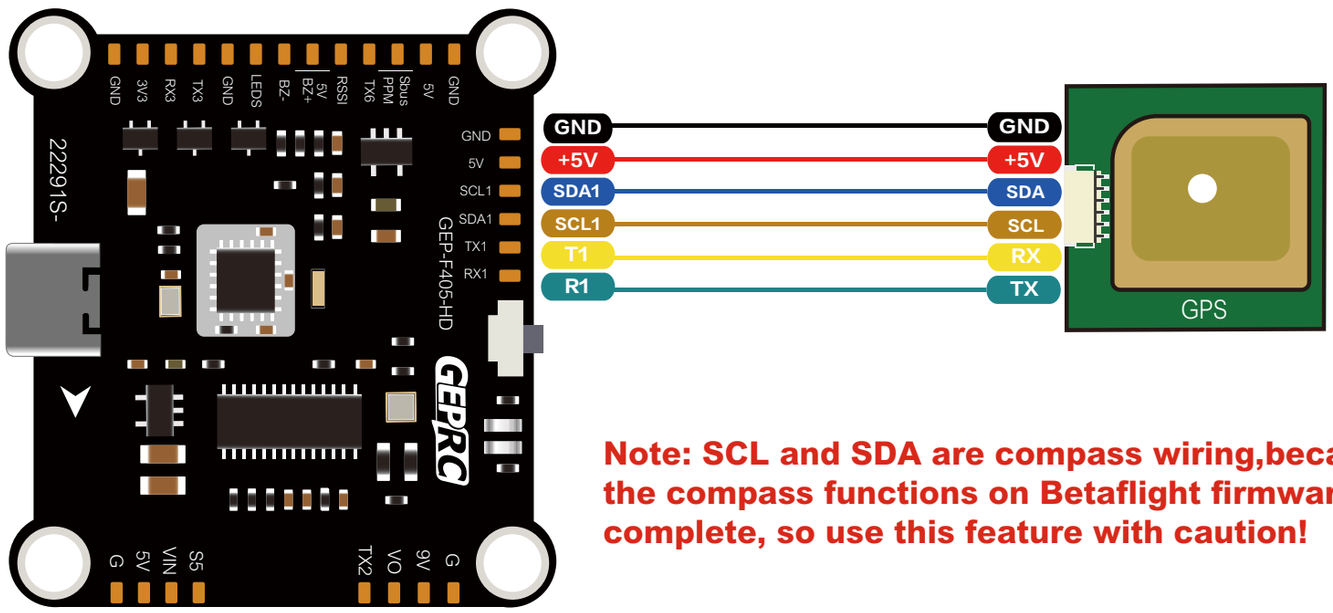

Note: SCL and SDA are compass wiring,because the compass functions on Betaflight firmware not complete, so use this feature with caution!

Official website www.geprc.com

Manual geprc.com/support

facebook facebook.com/geprc

Instagram instagram.com/geprc

GEPRC

www.geprc.com